UNIVERSAL
FURNITURE

GOOD, AFFORDABLE, SMART DESIGN.

INSTRUCTION SHEET

393/394644 Kitchen Island

Thank you for purchasing this quality product. Be sure to check all packing material carefully for small parts that may have come loose inside the carton during shipment.

Caution: (1) These parts are cumbersome and heavy. This product can best be assembled with the assistance of one or more persons in order to prevent personal injury and to insure parts are not damaged during the assembly process. If dirty, clean finished parts with mild dishwashing liquid and water solution applied on damp cloth. Cloth should not be excessively wet. Polish finish with soft cloth and an industry recognized furniture polish.

(2) To prevent damage to your floor or carpet, please check the bottom of each piece of furniture for stain residue and rough surfaces and also check for staples or nails left after removing the packaging material. The manufacturer will not be held responsible if preventative steps are not taken prior to installation.

(3) Unpack and dispose of all packing material but be careful not to throw away any assembly parts or hardware. Read the instruction sheet and parts list carefully. Remove all staples and screws used for packaging carefully using pliers and or screwdrivers to prevent injury and scratching or damaging flooring.

(4) During normal use everyday, screws, bolts, nuts and wooden plugs may loosen up. They should be periodically inspected and re-tightened to prevent damage to the furniture and (or) personal property or cause injury. Always check to be sure all hardware on this list and the above mentioned components is attached to the furniture properly and kept tightened at all times.

PARTS LIST:

#	Description	Qty.	#	Description	Qty.
A	Case	1pc	**B**	Foot	4pcs
C	Center Support	1pc	**D**	Leg Post	2pcs
E	Shelf	2pcs	**F**	Divider	1pc
G	Hardware Pack	1bag			

Assembly Procedure: (Please follow the sketches below.)

Step 1: Unpack, inspect, and read assembly instruction carefully. Lay out the parts and hardware. Make sure the quantity of each is correct.

Step 2: Lay case (A) down, screw feet (B) and center support (C) into the bottom of the case (A). Attach leg posts (D) with the pull-out shelf with phillip head bolts (1), spring washer (2), flat washer (3) using wrench (4) from hardware pack (G).

Step 3: Turn it upright. Put divider (F) in place. Then assemble shelves (E) with shelf clips (5) and screw (6) using screw driver (not provided).

Assembly is now complete.

HARDWARE PACK (G)

1	PHILLIP HEAD BOLT	5/16"*2-1/2"	4PCS
2	SPRING WASHER	5/16"	4PCS
3	FLAT WASHER	5/16"*23*2mm	4PCS
4	WRENCH	87*12mm	1PCS
5	SHELF CLIP		8PCS
6	SCREW	#6*5/8"	8PCS

UNIVERSAL
FURNITURE

GOOD, AFFORDABLE, SMART DESIGN.

INSTRUCTION SHEET

393/394644 Kitchen Island

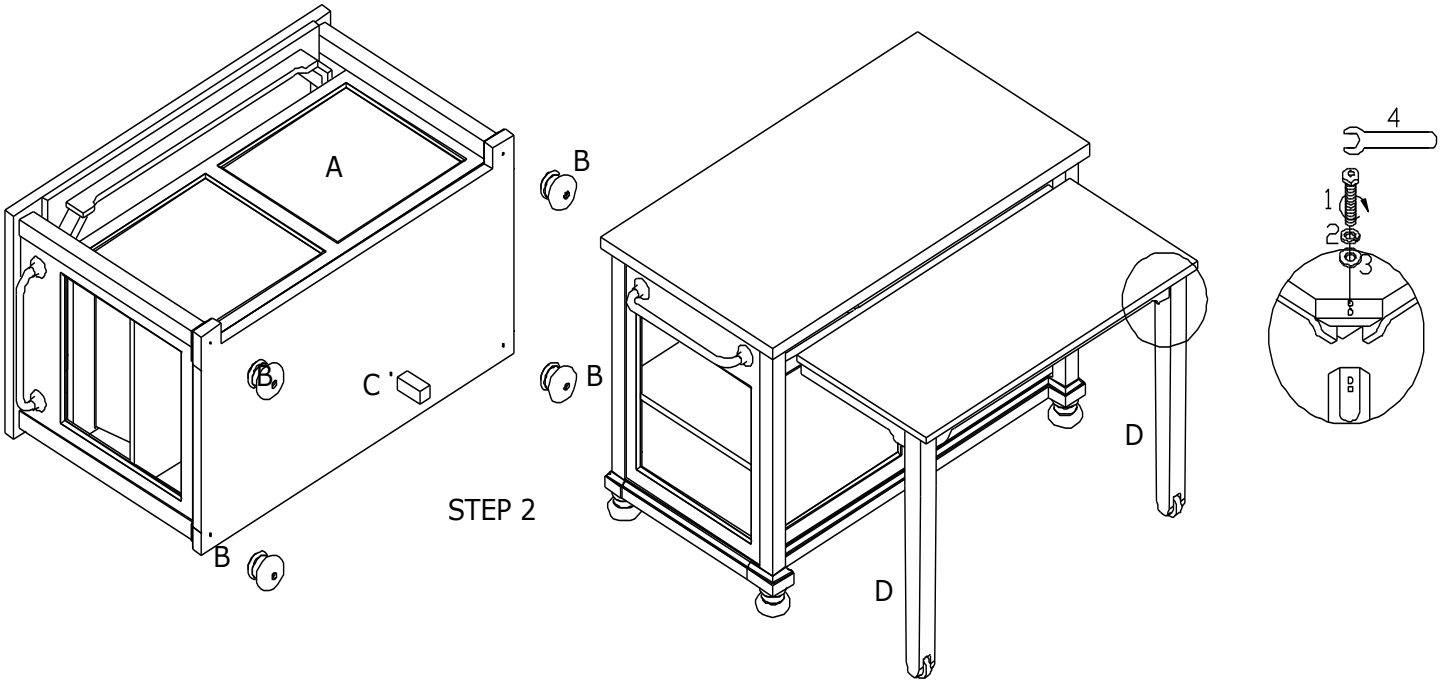

STEP 2

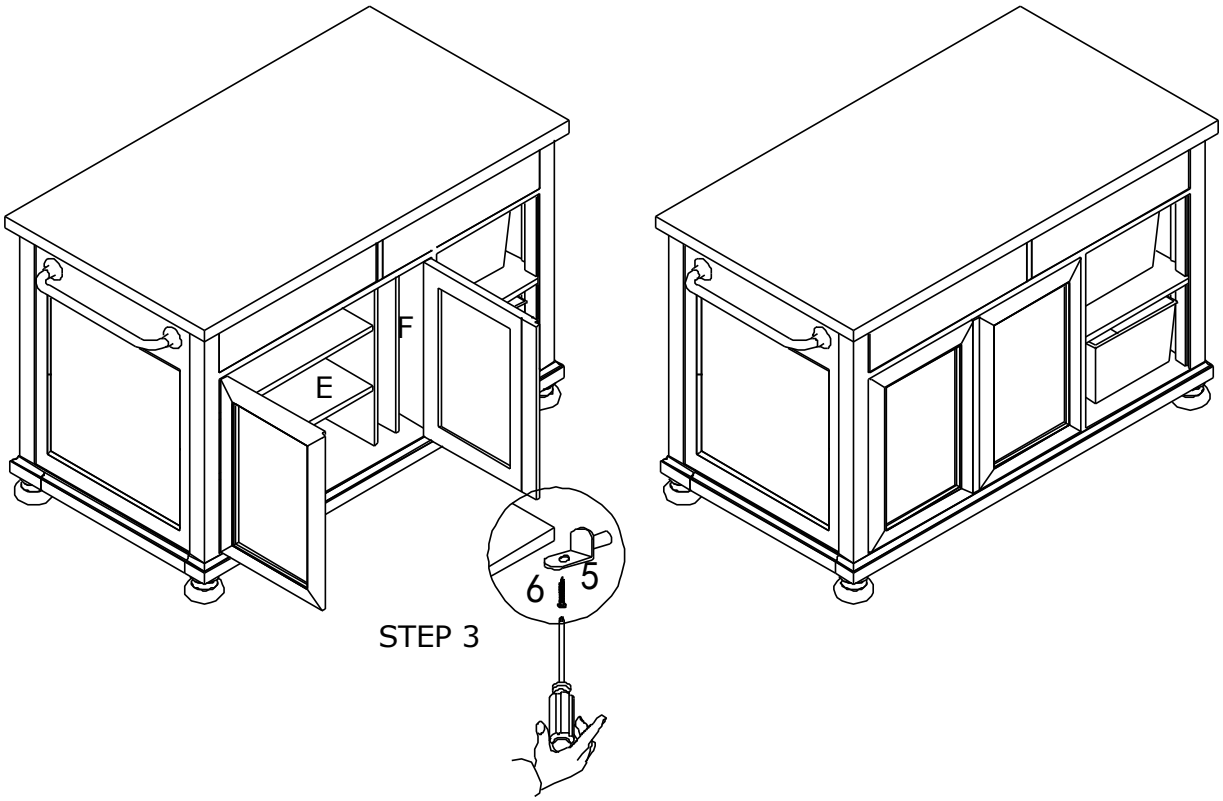

STEP 3