Thank you for purchasing this quality product. Be sure to check all packing material carefully for small parts that may have come loose inside the carton during shipment.

Caution: (1) These parts are cumbersome and heavy. This product can best be assembled with the assistance of one or more persons in order to prevent personal injury and to insure parts are not damaged during the assembly process. If dirty, clean finished parts with mild dishwashing liquid and water solution applied on damp cloth. Cloth should not be excessively wet. Polish finish with soft cloth and an industry recognized furniture polish.

(2) To prevent damage to your floor or carpet, please check the bottom of each piece of furniture for stain residue and rough surfaces and also check for staples or nails left after removing the packaging material. The manufacturer will not be held responsible if preventative steps are not taken prior to installation.

(3) Unpack and dispose of all packing material but be careful not to throw away any assembly parts or hardware. Read the instruction sheet and parts list carefully. Remove all staples and screws used for packaging carefully using pliers and or screwdrivers to prevent injury and scratching or damaging flooring.

Note 1:Use only the screws included in the package. Using different sizes could cause the wood to split or come out from the other side.

Note 2: Phillips head screwdriver required for assembly.

Assembly Procedures:

Step 1: Put the tri-fold mirror on dresser carefully. Connect the mirror and dresser with wood screws from hardware package by a Phillip head driver (Not provided)

If leveling is needed, adjust leveler located on the bottom center of the Dresser/Bureau as shown.

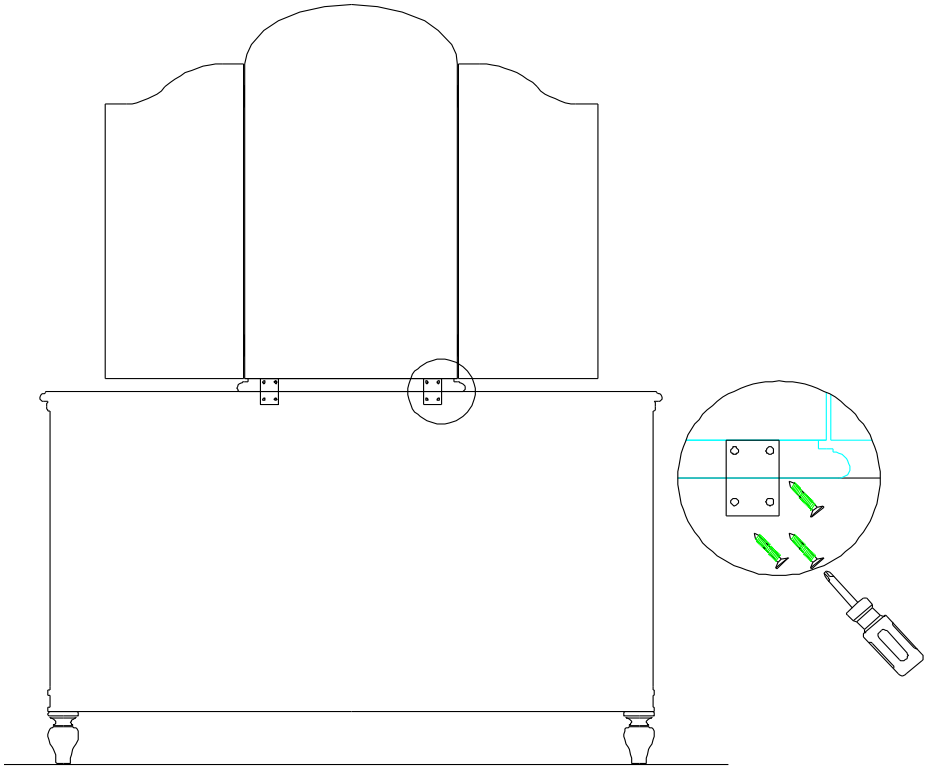

Assembly is now complete.